IoT-BASED SMART ZONE DETECTION WITH VOICE MESSAGE AND SMS ALERT SYSTEM

A project submitted to the Bharathidasan University
in partial fulfillment of the requirements
For the award of the Degree of

BACHELOR OF COMPUTER APPLICATIONS

Submitted by

KISHORE KUMAR S

Register Number: 235113541

Under the guidance of

Dr. R. RAJKUMAR, M.C.A., M.Phil., Ph.D.,

Assistant Professor

DEPARTMENT OF COMPUTER APPLICATIONS

BISHOP HEBER COLLEGE (AUTONOMOUS)

"Nationally Reaccredited at A^{++}Grade with a CGPA of 3.69 out of 4i n NAAC IV Cycle"

Recognized by UGC as "College of Excellence"

Affiliated to Bharathidasan University

TIRUCHIRAPPALLI-620017

OCTOBER–2025

DECLARATION

I here by declare that the project work presented is originally done by me under the guidance of **Dr. R. RAJKUMAR, M.C.A., M.Phil., Ph.D., Assistant Professor, UG Department of Computer Applications, Bishop Heber College (Autonomous), Tiruchirappalli - 620017** and has not been included in any other thesis/project submitted for any other degree.

Name of the Candidate	**:**	**KISHORE KUMAR S**
Register Number	**:**	**235113541**
Batch	**:**	**2023-2026**

Signature of the Candidate

Dr. R. RAJKUMAR, M.C.A., M.Phil., Ph.D.,
Assistant Professor,
UG Department of Computer Applications,
Bishop Heber College (Autonomous),
Tiruchirappalli – 620017

Date:

CERTIFICATE

This is to certify that the project work entitled **"IoT BASED SMART ZONE DETECTION WITH VOICE MESSAGE AND SMS ALERT SYSTEM"** is a bonafide record work done by **KISHORE KUMAR S, Register Number: 235113541** in partial fulfillment of the requirements for the award of the degree of **BACHELOR OF COMPUTER APPLICATIONS** during the period **2023 - 2026.**

Place: **Signature of the Guide**

UG DEPARTMENT OF COMPUTER APPLICATIONS

BISHOP HEBER COLLEGE (AUTONOMOUS),

"Nationally Reaccredited at A^{++}Grade with a CGPA of 3.69 out of 4 in NAAC IV Cycle"

(Recognized by UGC as "College of Excellence")

(Affiliated to Bharathidasan University)

TIRUCHIRAPPALLI–620017

Date:

Course Title: Project **Course Code: U23CA5PJ**

CERTIFICATE

The Viva-Voce examination for the candidate **KISHORE KUMAR S (235113541),** was held on _____.

Signature of the Guide **Signature of the HOD**

Examiners:

1.

2.

ACKNOWLEDGEMENT

I would like to thank almighty for blessing me with strength and health. Inspiration and motivation has always played a key role in success of my venture.

I wish to express my sincere thanks to **Dr. PRINCY MERLIN, M.Sc., M.Phil., Ph.D., Principal, Bishop Heber College, Tiruchirappalli.** who gave me the opportunity to do the course in this college.

I show my deep sense of gratitude to **Dr. J. JAMES MANOHARAN, MCA., M.Phil., Ph.D., PGDCA., Associate Professor and Head, UG Department of Computer Applications, Bishop Heber College, Tiruchirappalli.** Who encourage me and provided me the opportunity to prepare the project.

I am grateful to thank my guide **Dr. R. RAJKUMAR, MCA., M.Phil., Ph.D., Assistant Professor, UG Department of Computer Application** who encouraged, motivated, corrected at every step, whose valuable guidance and supervision has helped me throughout the project which has shaped my project work as it shows.

I also thank technical staffs for their valuable guidance and support throughout the project, I am also immensely obliged to my friends for their elevating inspirational, support and encouragement in completion of this project.

Last but not the least, my parents, the one who aspires me to be focused, and dedicated in the work I do, and for being my moral support, so with due regards I express my gratitude to them.

KISHORE KUMAR S

ABSTRACT

Road safety has become one of the major challenges in modern transportation systems due to the rapid increase in vehicles and the negligence of drivers in following traffic regulations. Many road accidents occur because drivers fail to notice important signboards such as speed limits, accident-prone zones, school zones, and hospital areas. Traditional static signboards are often overlooked, especially when the driver is distracted or driving at high speed. To overcome this limitation, a Smart Zone Detection system using IoT is proposed. In this approach, Radio Frequency Identification (RFID) tags are embedded into traffic signboards, and an RFID reader is placed inside the vehicle. When the vehicle passes near a signboard, the RFID reader automatically detects the tag and provides an immediate alert to the driver in the form of a voice notification as well as an SMS message. This ensures that the driver is continuously aware of critical road information. Furthermore, in case of emergencies, the system shares the location of the vehicle with family members, enabling quick support and safety monitoring. This IoT-based solution enhances driver awareness, minimizes accidents, and provides real-time communication of zone information, thereby contributing to smarter and safer transportation systems

Table of Contents

S.No.	Title	Page.No.
1.	Introduction	1
2.	Existing and Proposed System	5
3.	Software and Hardware Requirements	8
4.	Review of Literature	37
5.	Definition of the Problem and Scope of the Research work	43
6.	Architectural Design	46
7.	Results and Discussions	50
8.	Conclusion &Future Enhancement	52
9.	References	55
10.	Paper Publication	58
11.	Appendix	68

INTRODUCTION

1. INTRODUCTION

Road transportation plays a vital role in the mobility of people and goods across the world. With the rapid increase in the number of vehicles, ensuring road safety has become a crucial challenge for both drivers and transportation authorities. One of the most significant factors contributing to safe driving is the correct understanding and interpretation of road signs. Road signs serve as standardized visual cues designed to guide, warn, and regulate drivers on roadways. They help to convey important information such as speed limits, pedestrian crossings, turn restrictions, and hazards ahead. However, in practice, many accidents occur due to drivers missing or misinterpreting road signs because of distraction, fatigue, poor visibility, or environmental conditions. To address these challenges, road sign detection has emerged as a vital area of research in intelligent transportation systems, computer vision, and autonomous driving.

Fig.1.1 Road sign

Road sign detection refers to the automatic identification and recognition of traffic signs using advanced technologies such as image processing, artificial intelligence, and machine learning. The objective is to equip vehicles or external monitoring systems with the ability to “see” and interpret road signs in

Real time, assisting human drivers or supporting fully autonomous navigation. In intelligent vehicles, the system continuously captures road images through on board cameras, processes the input to detect the presence of a traffic sign, and then classifies the sign into its respective category. This not only enhances driver awareness but also reduces the likelihood of accidents caused by human error. As modern vehicles integrate more automation, road sign detection becomes a critical component of Advanced Driver Assistance Systems (ADAS) and self-driving cars.

The importance of road sign detection can be understood in the broader context of road safety statistics. According to global traffic accident reports, a significant proportion of accidents are linked to negligence of traffic rules or failure to notice traffic signs. For example, over speeding often occurs when a driver fails to observe the speed limit sign in a given zone. Similarly, ignoring warning signs for sharp curves or pedestrian crossings can lead to severe accidents. By incorporating automatic sign recognition, vehicles can alert drivers when they exceed speed limits, enter restricted zones, or approach hazardous areas. This supportive mechanism acts as a second layer of observation that compensates for human lapses in attention. Consequently, road sign detection not only enhances individual driver safety but also contributes to reducing the overall accident rate and improving traffic discipline.

Research in road sign detection spans several decades, with early systems relying heavily on traditional image processing techniques. These approaches made use of color segmentation, shape detection, and template matching to identify traffic signs from captured images. For instance, circular, triangular, and rectangular shapes were associated with different categories of signs, while specific color combinations such as red borders or blue backgrounds were used for classification. While effective under ideal conditions, these methods often struggled with variations in lighting, weather, occlusion, or faded signs. With

the rapid advancement of computing technologies, machine learning and deep learning methods have become the dominant approaches in modern road sign detection systems. Convolutional Neural Networks (CNNs) and other deep architectures now enable systems to learn complex features automatically and achieve high levels of accuracy even in challenging real-world scenarios.

Beyond technological advancement, road sign detection has wide-ranging applications. In autonomous driving, it is indispensable for navigating complex environments while ensuring compliance with traffic regulations. For ADAS-enabled vehicles, the system serves as a driver-support tool by issuing warnings or overlaying augmented information on displays. Road authorities can also employ road sign detection systems mounted on monitoring vehicles or drones to assess the condition of traffic signs, detect missing or damaged signs, and plan timely maintenance. Moreover, the same technology can be adapted to assist visually impaired individuals in understanding their surroundings, promoting inclusivity in road usage.

Despite these benefits, several challenges remain in the development and deployment of road sign detection systems. Real-world road conditions are dynamic and unpredictable. Poor weather conditions such as heavy rain, fog, or snow can reduce visibility and obscure signs. Variations in illumination, ranging from bright sunlight to night time conditions, affect image clarity. Additionally, road signs maybe damaged, faded, tilted, or partially obstructed by trees, poles, or other vehicles. In some regions, the diversity of road sign designs and languages adds another layer of complexity to detection systems. Addressing these challenges requires robust algorithms that can generalize effectively across varying conditions, as well as the use of large and diverse datasets for training and evaluation.

Another important consideration is the real-time performance of road sign detection. For the system to be practically useful in vehicles, it must process visual information at high speed without causing delays. This requirement pushes researchers to design algorithms that balance accuracy with computational efficiency. Hardware limitations in low-cost vehicles further intensify the need for lightweight yet reliable detection methods. The growing adoption of edge computing and optimized AI models is helping to meet these performance demands, but achieving consistent real-time reliability remains a research focus.

In road sign detection has evolved into a key component of intelligent transportation systems, aiming to improve road safety, reduce accidents, and support the development of autonomous driving technologies. From early image processing methods to advanced deep learning models, the field has made significant progress, yet continues to face real-world challenges. With the increasing demand for safer and smarter roads, research and innovation in this area are expected to intensify, leading to more robust, efficient, and widely deployed solutions. By integrating road sign detection into vehicles and traffic management systems, societies can take a crucial step toward safer, smarter, and more sustainable transportation networks.

EXISTING SYSTEM AND PROPOSED SYSTEM

2. EXISTING SYSTEM AND PROPOSED SYSTEM

2.1 EXISTING SYSTEM

Road sign detection systems are mostly based on visual sensing methods that make use of cameras to capture images of sign boards along the road. These systems generally depend on identifiable features such as color, shape, and size to classify and recognize different types of traffic signs. Under normal driving conditions, they can provide acceptable results in detecting common signs like speed limits, stop signs, or directional boards. However, their accuracy drops significantly when external factors such as poor lighting at night or glare during the day reduce visibility. Similarly, bad weather conditions including rain, fog, or snow can distort the captured images, making recognition difficult. In addition, faded paint on old signboards or physical damage can lead to incorrect detection or even complete failure of the system. Obstacles such as trees, poles, or passing vehicles may also partially cover signs, leading to missed recognition. Another limitation is the frequent requirement for high maintenance of camera equipment to ensure proper functioning. These systems also need regular calibration to maintain image clarity and alignment. Such dependencies make them expensive and less reliable for continuous operation. As a result, traditional visual sensing–based road sign detection struggles to achieve consistent performance in dynamic real-world environments.

DISADVANTAGES

- Poor visibility
- Weather interference
- Faded signs
- Obstructed view
- High maintenance

2.2 PROPOSED SYSTEM

The proposed system introduces an IoT-based Smart Zone Detection mechanism to improve road safety and reduce accidents caused by driver negligence. It integrates Radio Frequency Identification (RFID) technology with signboards and vehicles to ensure continuous communication of critical road information. In this system, RFID tags are embedded in traffic signboards placed at accident-prone zones, school areas, hospital surroundings, and speed regulation points. An RFID reader is installed in the vehicle, which detects these tags whenever the vehicle passes through the zone. Upon detection, the system instantly generates a voice alert to notify the driver about the specific signboard information, reducing the risk of oversight. In addition, an SMS notification is sent to the driver's registered mobile device, reinforcing the warning and ensuring better attention. The system also incorporate safety feature where, in case of emergencies, the vehicle's real-time location is automatically shared with family members. This helps families monitor driver safety and provide immediate assistance if needed. By combining voice alerts, SMS notifications, and GPS-based location sharing, the system ensures enhanced driver awareness. It also minimizes the chances of accidents by reminding drivers of road rules. Overall, the proposed system provides an efficient and reliable IoT-based solution for smarter and safer transportation.

ADVANTAGES

- Provides real-time driver safety alerts.
- Reduces accidents in sensitive road zones.
- Enhances awareness of critical signboards.
- Shares emergency location with family.
- Ensures smarter and safer transportation.

HARDWARE REQUIREMENTS AND

SOFTWARE REQUIREMENTS

3. HARDWARE REQUIREMENTS AND SOFTWARE REQUIREMENTS

Hardware Requirement

- RFID–reader
- Key
- Power supply
- LCD
- Driver
- Motor
- GSM
- GPS

Software requirement

- Arduino IDE

Hardware Description

3.1 GSM(Global System for Mobile Communications)

GSM (Global System for Mobile Communications) is a widely adopted standard for mobile communications, enabling cellular networks to provide services such as voice calls, text messages, and data transmission. Developed in the 1980s and initially deployed in Europe, GSM has become the global standard for mobile phone systems, offering a reliable, scalable, and secure communication platform. The GSM network operates on two main components: the mobile station (MS), which includes the user’s mobile device, and the base station subsystem (BSS), which connects the mobile device to the network.

Fig.3.1.1. GSM

The GSM system relies on a digital transmission method, using Time Division Multiple Access (TDMA) to allocate time slots for multiple users within the same frequency channel. This method allows for efficient use of available spectrum and supports high capacity in mobile communication systems. GSM also incorporates encryption protocols to ensure the confidentiality and integrity of communication, making it a secure platform for voice and data exchanges.

A key feature of GSM is the SIM (Subscriber Identity Module) card, which holds user-specific data such as phone numbers, contacts, and security information. This card makes it easy for users to switch between devices without losing personal information. Additionally, GSM supports services such as SMS (Short Message Service), enabling text communication between mobile devices, and GPRS (General Packet Radio Service) for basic data services, providing internet access and multimedia messaging capabilities.

Despite the rise of newer communication technologies such as 4G and 5G, GSM remains widely used in many parts of the world, especially in rural or developing areas where the infrastructure for more advanced systems may not be readily available. It continues to serve as a reliable communication system for voice, text, and basic data services.

3.2 GPS (Global Positioning System)

GPS (Global Positioning System) is a satellite-based navigation system that provides precise location and time information anywhere on Earth, regardless of weather conditions. Developed by the United States Department of Defense and launched in the 1970s, GPS has become an indispensable tool for navigation, mapping, and location-based services across a wide range of industries, including transportation, telecommunications, agriculture, and emergency response.

Fig.3.2.1 GPS

GPS operates through a constellation of at least 24 satellites that orbit the Earth. These satellites transmit signals that are received by GPS receivers, which use the time difference between the signals from multiple satellites to calculate the receiver's precise location on Earth, often with an accuracy of a few meters. The system is based on a principle called trilateration, which involves measuring distances from at least three satellites to determine the receiver’s position. The more satellites a GPS receiver can access, the more accurate the location calculation becomes.

GPS provides not only positioning information but also time synchronization, which is crucial for various applications like telecommunications, power grids, and financial transactions. The system is highly reliable and operates continuously, providing 24/7serviceanywherein

the world. GPS technology has revolutionized navigation, enabling users to obtain real-time directions, track movements, and improve logistics operations. It is also widely used in applications such as geocaching, surveying, and mapping.

Beyond personal navigation, GPS plays a critical role in safety and emergency response. It enables first responders to pinpoint the location of accidents or emergencies, facilitating faster response times. Additionally, GPS-enabled devices such as smart phones, vehicles, and wearables of fertrack in Gand monitoring features, providing security and peace of mind. With ongoing advancements in GPS technology, such as improved accuracy and the integration of additional systems like Galileo and GLONASS, the global positioning system continues to evolve and support an increasing number of applications worldwide.

3.3 ARDUINO NANO

One kind of microcontroller board is the Arduino Nano, which is created by Arduino.cc. An Atmega328 microcontroller can be used to construct it. The Arduino UNO also makes use of this microcontroller. This versatile board comes in a compact size and offers an extensive range of uses. The Arduino Mega, Arduino Pro Mini, Arduino UNO, Arduino YUN, Arduino Lilypad, Arduino Leonardo, and Arduino Due are the principal other Arduino boards. AVR Development Board, PIC Development Board, Raspberry Pi, Intel Edison, MSP430 Launchpad, and ESP32 board are some additional development boards. This board is similar to an Arduino Duemilanove board in that it offers a lot of features. The packaging for this Nano board is distinct, though.It lacks a DC jack, which allows the power supply to be supplied via a tiny USB port instead of being directly attached to pins like VCC and GND. A small USB connector on the board allows you to supply 6 to 20 volts to this board

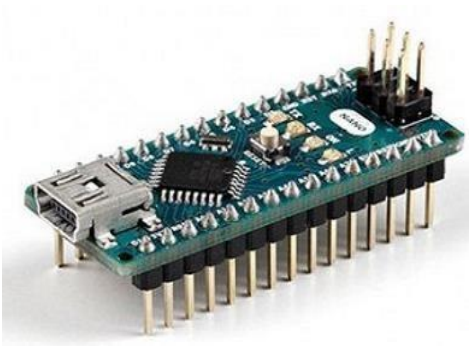

Fig.3.3.1 Arduino Nano

- **Started With The Arduino Nano**

The Arduino Nano is a small, complete, and breadboard-friendly board based on the ATmega328P. It offers the same connectivity and specs of the UNO board in a smaller form factor.

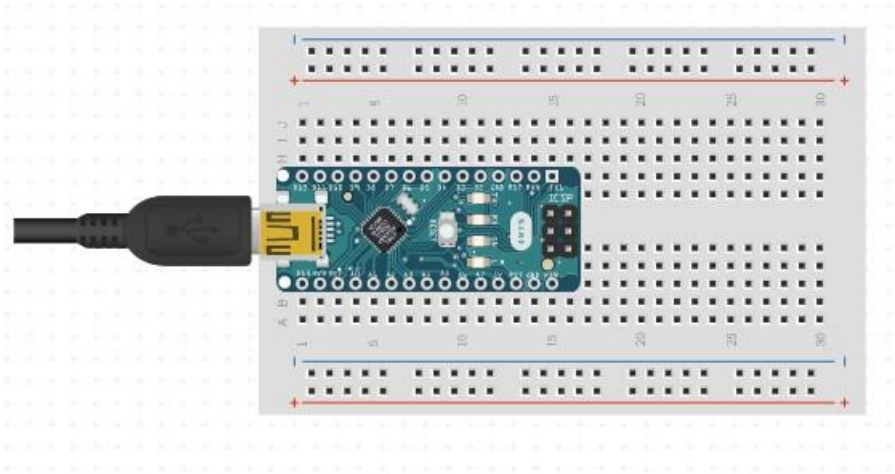

Fig.3.3.2 Arduino NANO Interface

The Arduino Nano is programmed using the Arduino Software (IDE), our Integrated Development Environment common to all our boards and running both online and offline. For more information on how to get started with the Arduino Software visit the Getting Started page.

Arduino Nano on the Arduino Desktop IDE

If you want to program your Arduino Nano while offline you need to install the Arduino Desktop IDET connect the Arduino Nano to your

computer, you'll need a Mini-B USB cable. This also provides power to the board, as indicated by the blue LED (which is on the bottom of the Arduino Nano 2.x and the top of the Arduino Nano 3.0).

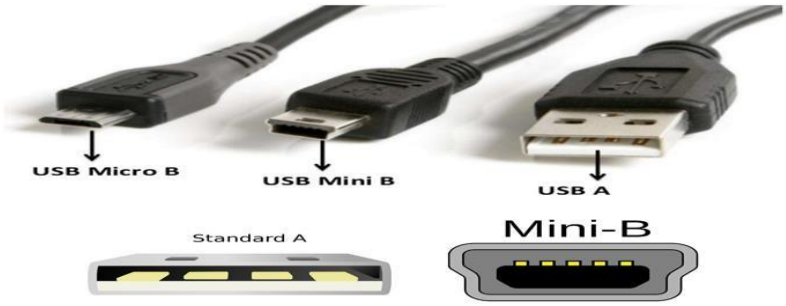

Fig.3.3.3 NANO Interfacing USB Types of Port

Open your first sketch

- Open the LED blink example sketch : File>Examples>01.Basics>Blink.

Select your board type and port

- Select Tools>Board>Arduino AVR Boards>Arduino Nano.

NOTE: We have updated the Nano board with a fresh boot loader. Boards sold by us from January 2018 have this new boot loader, while boards manufactured before that date have the old boot loader. First, check that **Tools > Board>Boards Manager shows you have the Arduino AVR Boards** 1.16.21 or later installed. Then, to program the NEW Arduino NANO boards you need to choose **Tools > Processor > ATmega328P**. To program old boards you need to choose **Tools > Processor > ATmega328P (Old Boot loader)**. If you get an error while uploading or you are not sure which boot loader you have, try each Tools > Processor menu option until your board gets properly programmed.

3.4 Key

The emergency key is an essential safety and backup mechanism that ensures immediate access and reliability during unexpected situations. In

today’s world, where most systems are controlled by advanced electronics, automation, and digital technologies, the importance of an emergency key has significantly increased. It acts as a manual alternative or backup solution that can be used when the primary system fails due to technical errors, battery drain, power outages, or damage. Emergency keys are designed to provide users with a sense of security and assurance that they will not be left helpless in critical times. For example, in modern automobiles equipped with smart key systems, an emergency key is embedded within the remote device, allowing the user to unlock the car manually when the electronic function is disabled. Similarly, in smart homes, digital locks often come with a hidden emergency key option that enables residents to access their property in case of system malfunction or power failure. Apart from household and automobile use, emergency keys also play a vital role in industrial, healthcare, and safety domains. In hospitals, emergency backup keys may include manual equipment and switches that help staff operate life-saving devices even during sudden power loss or system crashes. In the security industry, emergency keys are provided to access lockers, safes, and restricted areas when electronic authentication systems fail. Their significance lies in their ability to minimize downtime, avoid panic, and ensure continuity of critical operations. Moreover, emergency keys are usually designed with strong, durable materials to withstand long-term use, ensuring they can perform effectively when needed most. They are lightweight, easy to carry, and often hidden in specialized compartments for safety. The common advantage of having an emergency key is the peace of mind it provides, as it guarantees a backup plan is always available during urgent conditions. As technology continues to advance, the role of emergency keys will remain relevant because no system is fully immune to errors, failures, or accidents. Therefore, the emergency key can be considered a small but powerful safeguard that bridges the gap between convenience and security, making it a necessary component in modern life.

3.5 RFID Reader

The RFID reader is a vital component of modern identification and access control systems. RFID, which stands for Radio Frequency Identification, works on the principle of wireless communication between a reader and an RFID tagor card. The RFID reader generates an electromagnetic field, and when a compatible RFID tag enters this field, it transmits stored information back to the reader. This process allows for contactless identification, which is both fast and reliable. In many security and automation systems, the RFID reader acts as the primary input device, responsible for detecting and validating authorized users or objects. For example, in vehicle security systems, an RFID reader can be installed to identify the driver's key card or tag before enabling the ignition. In building automation, it is widely used to allow only authorized personnel to enter restricted areas. RFID readers are designed with high sensitivity and accuracy, enabling them to detect tags at varying distances depending on their frequency range—low frequency (LF), high frequency (HF), or ultra-high frequency(UHF). The advantage of using RFID technology lies in its durability and convenience, a sit does not require direct line-of-sight like barcodes and can be embedded in cards, key chains, or wearable devices. Moreover, RFID readers are integrated with microcontrollers or processors to process the data received and match it with stored information in a database. If the information matches, the system allows access or initiates the next action, such as unlocking a door, starting a vehicle, or activating machinery. Due to their versatility, RFID readers have become an integral part of IoT-based smart systems, where they support functions such as attendance tracking, toll collection, supply chain management, and driver authentication. Their compact size, low power consumption, and ability to communicate securely make them indispensable in modern applications where identification and automation are critical.

3.6 Driver and Motor

The driver and motor are two interconnected components that play a crucial role in the functioning of any electromechanical system. A motor is a device that converts electrical energy into mechanical energy, enabling physical motion in machines and automation systems. Depending on the application, different types of motors such as DC motors, stepper motors, or servo motors are used. For instance, in security systems or automated gates, motors are employed to lock or unlock mechanisms after receiving signals from the control unit. However, a motor alone cannot operate efficiently without a driver circuit. The driver acts as an interface between the low-power control signals generated by the microcontroller and the high-power requirements of the motor. Microcontrollers typically produce logic-level signals that are insufficient to directly drive a motor, and this is where the driver component becomes essential. The driver amplifies these signals and provides sufficient voltage and current to operate the motor smoothly. For example, an L293D or L298N motor driver is commonly used in embedded projects, enabling bidirectional control of DC motors and stepper motors. The driver also provides protective features such as current regulation and isolation, ensuring that the microcontroller remains safe from high voltages and reverse currents. Once the driver receives an instruction, it energizes the motor coils, causing the motor shaft to rotate or move in the desired direction. This rotation is then used to perform mechanical actions like opening a door, moving a robotic arm, or engaging a locking system. The efficiency of the overall system depends heavily on the synchronization between the driver and the motor. Together, they form the core of many electromechanical applications, from industrial automation and robotics to transportation systems and household appliances. The use of drivers and motors enhances the reliability of automation by ensuring accurate, responsive, and powerful motion control. In modern embedded systems, the

combination of RFID for authentication, drivers for signal amplification, and motors for execution creates a secure and automated process that improves safety, convenience, and operational efficiency.

3.7 LCD(Liquid Crystal Display)

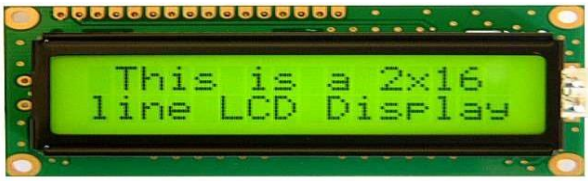

Fig.3.7.1 LCD Display

LCD Display

LCD (Liquid Crystal Display) screen is an electronic display module and find a wider an geo of applications. A16x2 LCD display is very basic module and is very commonly used in various devices and circuits.

A 16x2 LCD means it can display 16 characters per line and there are 2 such lines. In this LCD each character is displayed in 5x7 pixel matrix. This LCD has two registers, namely, Command and Data. The command register stores the command instructions given to the LCD, The data register stores the data to be displayed on the LCD

The data is the ASCII value of the character to be displayed on the LCD. Liquid crystal displays are used for display of numeric and alphanumeric character in dot matrix and segmental displays. The two liquid crystal materials which are commonly used in display technology are nematic and cholesteric whose schematic arrangement of molecules is shown in fig. The most popular liquid crystal structure is the Nematic Liquid Crystal (NLC). In this all the

molecules align themselves approximately parallel to a unique axis (director), while retaining the complete translational freedom. The liquid is normally transparent, but if subjected to a strong electric field, disruption of the well ordered crystal structure takes place causing the liquid to polarize and turn opaque. The removal of the applied electric field allows the crystal structure to regain its original form and the materials become transparent.

Based on the construction, LCD's are classified into two types. They are,

(i) Dynamic scattering type

(ii) Field effect type.

Dynamic scattering type

The construction of the dynamic scattering liquid crystal cell is shown in the fig. The display consists of two glass plates, each coated with tin oxide (SnO2) on the inside with transparent electrodes separated by a liquid crystal layer,5μA to 50 μA thick. The oxide coating on the front sheet is etched to produce a single or multi- segment pattern of characters, with each segment properly insulated from each other. A weak electric field applied to liquid crystal tends to align molecule in the direction of the field. As soon as the voltage exceeds certain threshold value, the domain structure collapses and the appearance is changed. As the voltage grows further, the flow becomes turbulent and the substance turns optically homogenous. In this disordered state, the liquid crystal scatters light.

Thus, when the liquid is not activated, it is transparent. When the liquid is activated, the molecular turbulence causes light to be scattered in all directions and the cell appears bright. This phenomenon is called dynamic scattering

Field effect type

The construction of the field effect LCD display is similar to that of the dynamic scattering type, with the expectation that two thin polarizing optical filters are placed at the inside of each glass sheet.

The LCD material is of twisted nematic type which twists the light (change in direction of polarization) passing through the cell when the latter is not energized. This allows light to pass through the optical filters and the cell appears bright. When the cell is energized, no twisting of light takes place and the cell appears dull.

Liquid crystal cells are of two types (i) transitive type (ii) reflective type. In the transitive type cell both glass sheets are transparent so that the light from the rear source is scattered in the forward direction when the cell is activated. The reflecting type cell has a reflecting surface on one side of the glass sheet. The incident light on the front surface of the cell is dynamically scattered by an activated cell. Both types of cells appear quite bright when activated even under ambient light conditions.

Liquid crystals consumes mall amount of energy, in a seven segment display the current drawn is about 25 μA for dynamic scattering cells and 300 μA .for field effect cells LCD's require ac voltage supply. A typical voltage supply to dynamic scattering LCD's are normally used for seven-segmental displays.

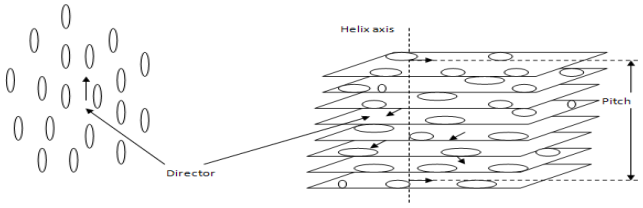

Fig.3.7.2 Schematic arrangement in liquid crystal

3.8 Buzzer

A buzzer is a small, simple, and widely-used audio signalling device that produces a distinctive buzzing or beeping sound when an electrical current passes through it. It consists of a coil of wire and a diaphragm or vibrating element. When an electric voltage is applied to the buzzer, it causes the coil to generate a magnetic field, which, in turn, attracts the diaphragm or moves it rapidly back and forth. This motion of the diaphragm creates vibrations in the surrounding air, producing the audible sound that we associate with buzzers. Buzzers are commonly employed in various applications, such as alarms, timers, doorbells, and electronic games, to alert users to specific events or conditions due to their simplicity, reliability, and ability to provide immediate auditory feedback.

Fig.3.8.1 Buzzer

3.9 Power Supplies

A power supply (sometimes known as a power supply unit or PSU) is a device or system that supplies electrical or other types of energy to an output

load or group of loads. The term is most commonly applied to electrical energy supplies, less often to mechanical ones, and rarely to others.

This circuit is a small +5V power supply, which is useful when experimenting with digital electronics. Small inexpensive wall transformers with variable output voltage are available from any electronics shop and supermarket. Those transformers are easily available, but usually their voltage regulation is very poor, which makes then not very usable for digital circuit experimenter unless a better regulation can be achieved in some way. The following circuit is the answer to the problem.

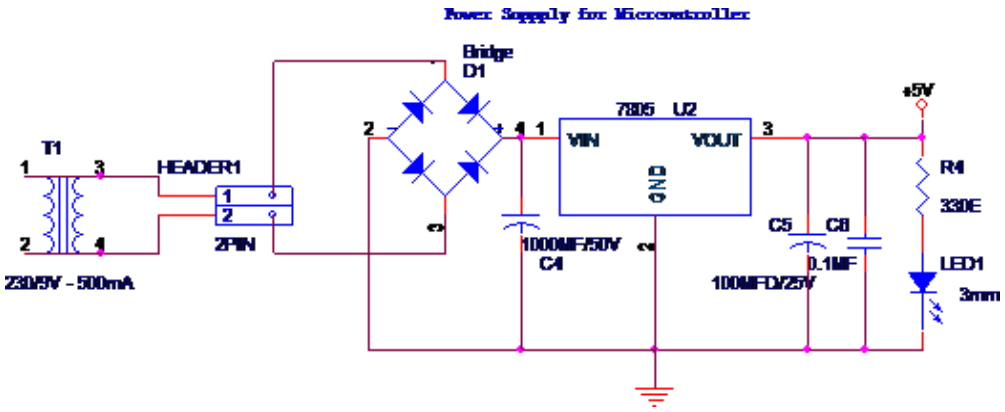

Fig.3.9.1 Block diagram of power supply

3.10 Transformer

A transformer is a device that transfers electrical energy from one circuit to another through inductively coupled wires. A changing current in the first circuit (the primary) creates a changing magnetic field; in turn, this magnetic field induces a changing voltage in the second circuit (the secondary). By adding a load to the secondary circuit, one can make current flow in the transformer, thus transferring energy from one circuit to the other. The secondary induced voltage V_S is scaled from the primary V_P by a factor ideally equal to the ratio of the number of turns of wire in their respective windings:

$$\frac{V_S}{V_P} = \frac{N_S}{N_P}$$

By appropriate selection of the numbers of turns, a transformer thus allows an alternating voltage to be stepped up— by making N_S more than N_P or stepped down, by making it less.

A key application of transformers is to reduce the current before transmitting electrical energy over long distances through wires. Most wires have resistance and so dissipate electrical energy at a rate proportional to the square of the current through the wire. By transforming electrical power to a high-voltage, and therefore low-current form for transmission and back again afterwards, transformers enable the economic transmission of power over long distances. Consequently, transformers have shaped the electricity supply industry, permitting generation to be located remotely from points of demand. All but a fraction of the world's electrical power has passed through a series of transformers by the time it reaches the consumer.

Transformers are some of the most efficient electrical 'machines', with some large units able to transfer 99.75% of their input power to their output. Transformers come in a range of sizes from a thumbnail-sized coupling transformer hidden inside a stage microphone to huge gigavolt-ampere-rated units used to interconnect portions of national power grids. All operate with the same basic principles, though a variety of designs exist to perform specialized roles throughout home and industry.

The transformer is based on two principles: first, that an electric current can produce a magnetic field (electromagnetism) and, second, that a changing magnetic field with in a coil of wire induces a voltage across the ends of the coil (electromagnetic induction). By changing the current in the primary coil, one changes the strength of its magnetic field; since the secondary coil is wrapped around the same magnetic field, a voltage is induced across the secondary.

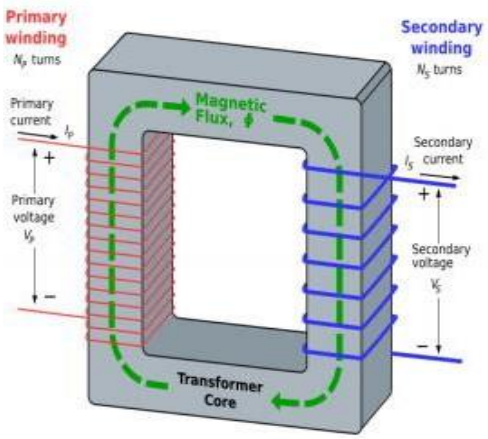

Fig.3.10.1 An ideal step-down transformer

A simplified an ideal step-down transformer design is shown in the above figure. A current passing through the primary coil creates a magnetic field. The primary and secondary coils are wrapped around a core of very high magnetic permeability, such as iron; this ensures that most of the magnetic field lines produced by the primary current are within the iron and pass through the secondary coil as well as the primary coil.

3.11 Rectifier

A rectifier is an electrical device that converts alternating current (AC), which periodically reverses direction, to direct current (DC), which flows in only one direction. The process is known as rectification. Rectifiers are used as components of power supplies and as detectors of radio signals. Mainly there are three types of rectifier i.e. half wave rectifier, full wave rectifier and Bridge Rectifier.

Half-wave rectifier

In half-wave rectification of a single-phase supply, either the positive or negative half of the AC wave is passed, while the other half is blocked. Because only one half of the input waveform reaches the output, mean voltage is lower. Half-wave rectification requires a single diode in a single-phase supply, or three

in a three-phase supply. Rectifiers yield a unidirectional but pulsating direct current; half-wave rectifiers produce far more ripple than full-wave rectifiers, and much more filtering is needed to eliminate harmonics of the AC frequency from the output.

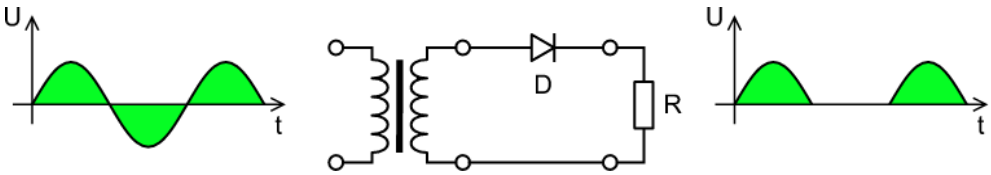

Fig.3.11.1 Half Wave Rectifier

Full-wave rectifier

A full-wave rectifier converts the whole of the input waveform to one of constant polarity (positive or negative) at its output. Full-wave rectification converts both polarities of the input waveform to pulsating DC (direct current), and yields a higher average output voltage. Two diodes and a center tapped transformer are needed.

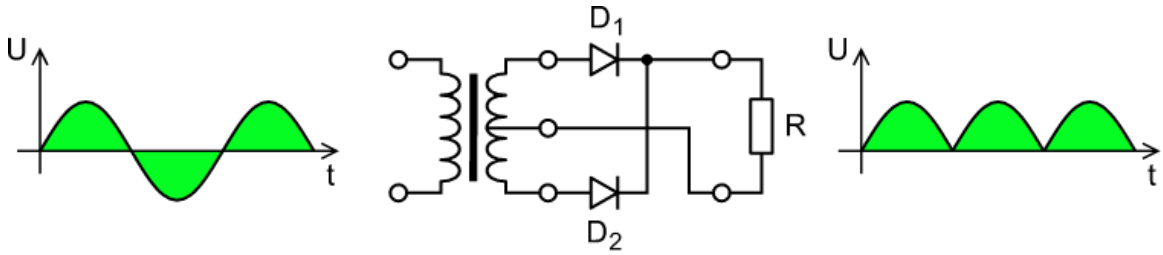

Fig.3.11.2 Full-Wave Rectifier

Bridge Rectifier

A diode bridge is an arrangement of four (or more) diodes in a bridge circuit configuration that provides the same polarity of output for either polarity of input. When used in its most common application, for conversion of an alternating current (AC) input into a direct current (DC) output, it is known as a bridge rectifier. A bridge rectifier provides full-wave rectification from a two-wire AC input, resulting in lower co stand weight as compared to a rectifier with

a 3-wire input from a transformer with a center-tapped secondary winding. The essential feature of a diode bridge is that the polarity of the output is the same regardless of the polarity at the input.

Basic operation

According to the conventional model of current flow, current is defined to be positive when it flows through electrical conductors from the positive to the negative pole. In actuality, free electrons in a conductor nearly always flow from the negative to the positive pole. In the vast majority of applications, however, the actual direction of current flow is irrelevant. Therefore, in the discussion below the conventional model is retained.

In the diagrams below, when the input connected to the left corner of the diamond is positive, and the input connected to the right corner is negative, current flows from the upper supply terminal to the right along the red (positive) path to the output, and returns to the lower supply terminal via the blue (negative) path.

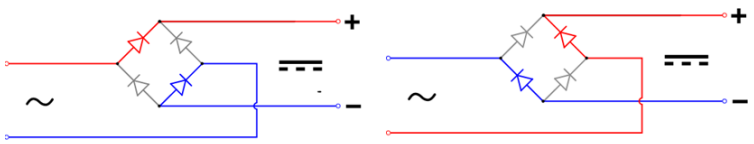

Fig.3.11.3 Operation of bridge rectifier

When the input connected to the left corner is negative, and the input connected to the right corner is positive, current flows from the lower supply terminal to the right along the red (positive) path to the output, and returns to the upper supply terminal via the blue (negative) path.

In each case, the upper right output remains positive and lower right output negative. Since this is true whether the input is AC or DC, this circuit not only produces a DC output from an AC input, it can also provide what is

sometimes called "reverse polarity protection". That is, it permits normal functioning of DC-powered equipment when batteries have been installed backwards, or when the leads (wires) from a DC power source have been reversed, and protects the equipment from potential damage caused by reverse polarity.

3.12 IC Voltage Regulators

Voltage regulators comprise a class of widely used ICs. Regulator IC units contain the circuitry for reference source, comparator amplifier, control device, and overload protection all in a single IC. Although the internal construction of the IC is somewhat different from that described for discrete voltage regulator circuits, the external operation is much the same. IC units provide regulation of either a fixed positive voltage, a fixed negative voltage, or an adjustable set voltage. A power supply can be built using a transformer connected to the ac supply line to step the ac voltage to desired amplitude, then rectifying that ac voltage, filtering with a capacitor and RC filter, if desired, and finally regulating the dc voltage using an IC regulator. The regulators can be selected for operation with load currents from hundreds of milliamperes to tens of amperes, corresponding to power ratings from milliwatts to tens of watts.

Three-Terminal Voltage Regulators

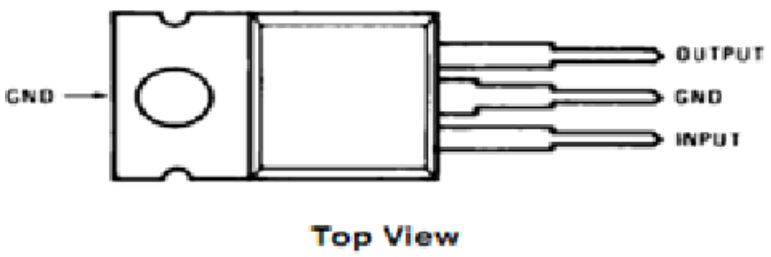

Fig.3.12.1 Three-Terminal Voltage Regulators

Figure shows the basic connection of a three-terminal voltage regulator IC to a load. The fixed voltage regulator has an unregulated dc input voltage, V_i,

applied to one input terminal, a regulated output dc voltage, V_o, from a second terminal, with the third terminal connected to ground. For a selected regulator, IC device specifications list a voltage range over which the input voltage can vary to maintain a regulated output voltage over a range of load current. The specifications also list the amount of output voltage change resulting from a change in load current(load regulation)or in input voltage(line regulation).The series 78 regulators provide fixed regulated voltages from 5 to 24 V. Figure shows how one such IC, a 7805, is connected to provide voltage regulation with output from this unit of +5V dc. An unregulated input voltage V is filtered by capacitor C1 and connected to the IC's IN terminal. The IC's OUT terminal provides a regulated + 12V which is filtered by capacitor C2 (mostly for any high-frequency noise). The third IC terminal is connected to ground (GND). While the input voltage may vary over some permissible voltage range, and the output load may vary over some acceptable range, the output voltage remains constant within specified voltage variation limits. These limitations are spelled out in the manufacturer's specification sheets. There are two types of voltage regulator they are 78xx series and 79xx series.

3.13 78xxseries

There are common configurations for 78xx ICs, including 7805 (5 V), 7806(6V),7808(8V),7809(9V),7810(10V),7812(12V),7815(15V),
7818 (18 V), and 7824 (24 V) versions. The 7805 is the most common, as its regulated 5-volt supply provides a convenient power source for most TTL components.

Less common are lower-power versions such as the LM78Mxx series (500 mA) and LM78Lxx series (100 mA) from National Semiconductor. Some devices provides lightly different voltages than usual, such as the LM78L62 (6.2 volts) and LM78L82 (8.2 volts) as well as the STMicroelectronics L78L33ACZ (3.3 volts).

3.14 Software Requirement

Arduino Software(IDE)

The Arduino Integrated Development Environment –or Arduino Software (IDE)-contains a text editor for writing code, a message area, a text console, a toolbar with buttons for common functions and a series of menus. It connects to the Arduino hardware to upload programs and communicate with them.

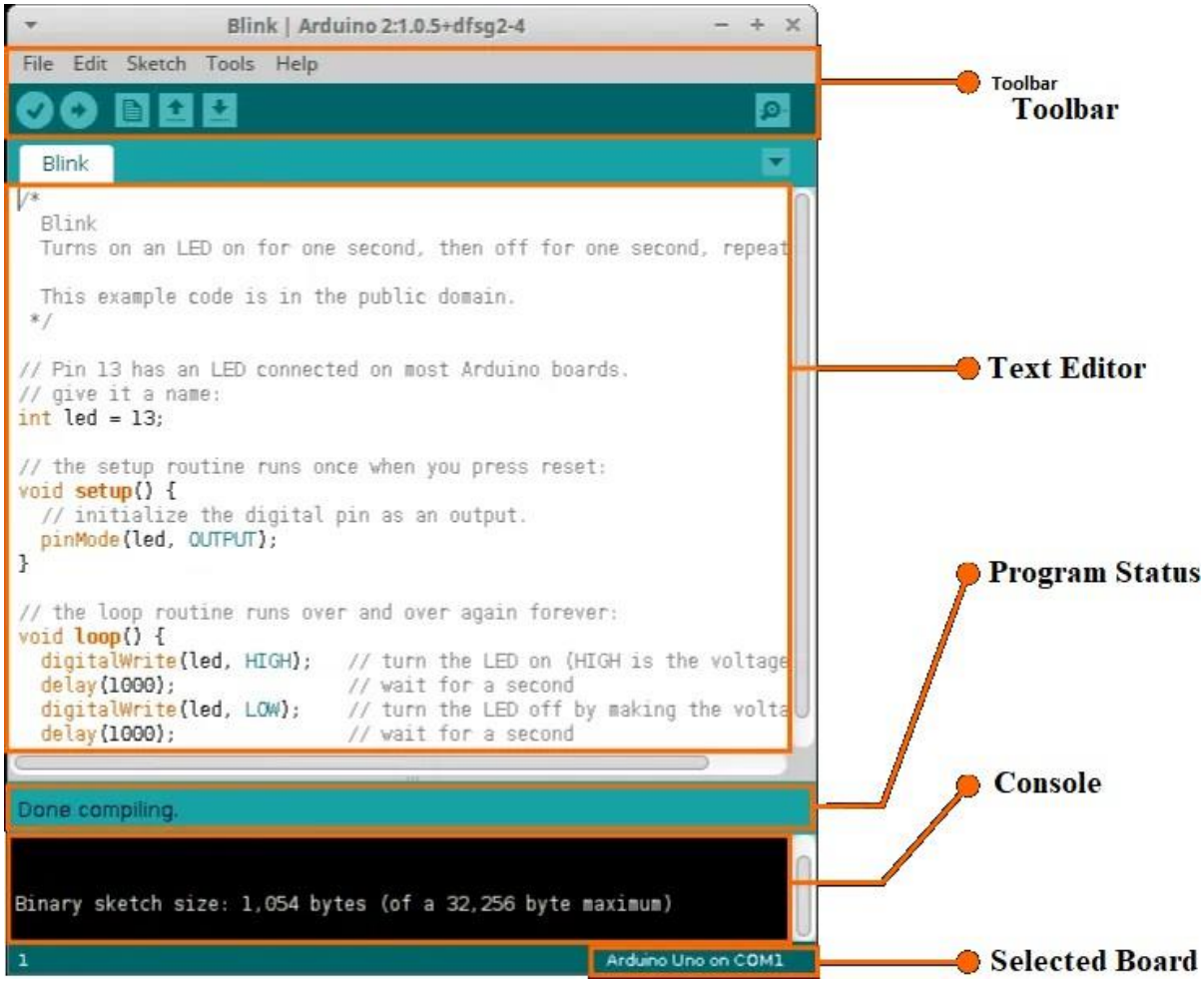

Fig.3.14.1 Arduino IDE

- **Writing Sketches**

Programs written using Arduino Software (IDE)are called sketches. These sketches are written in the text editor and a resaved with the file extension. ino.

The editor has features for cutting/pasting and for searching/replacing text. The message area gives feedback while saving and exporting and also displays errors. The console displays text output by the Arduino Software (IDE), including complete error messages and other information. The bottom right and corner of the window displays the configured board and serial port. The tool bar buttons allow you to verify and upload programs, create, open, and save sketches, and open the serial monitor.

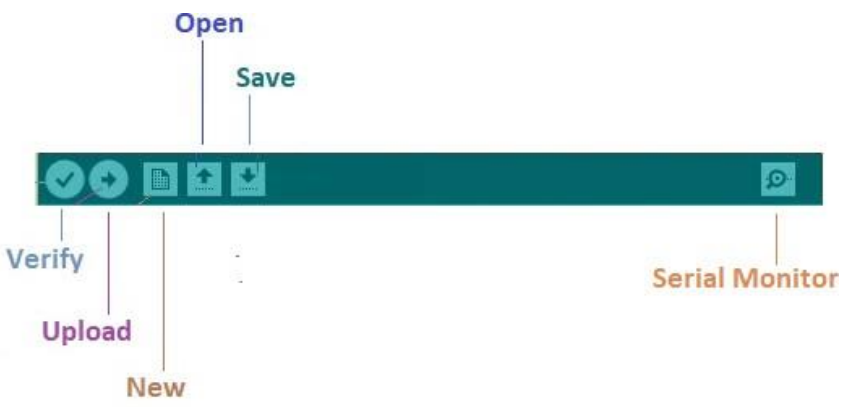

Fig.3.14.2 Arduino IDE Tool Icon

- **Verify** Checks your code for errors compiling it.
- **Upload** Compiles your code and uploads it to the configured board. See uploading below for details. Note: If you are using an external programmer with your board, you can hold down the "shift" key on your computer when using this icon. The text will change to "Upload using Programmer"
- **New** Creates an ewsketch.
- **Open** Presents a menu of all the sketches in your sketchbook. Clicking one will open it within the current window overwriting its content.
- **Save** Saves your sketch.
- **Serial Monitor** Opens the serial monitor.

Additional commands are found within the five menus: File, Edit, Sketch, Tools, Help. The menus are context sensitive, which means only those items relevant to the work currently being carried out are available.

3.15 File

- **New** Creates a new instance of the editor, with the bare minimum structure of a sketch already in place.
- **Open** Allows to load a sketch file browsing through the computer drives and folders.
- **Open** Recent Provides a short list of the most recent sketches, ready to be opened.
- **Sketchbook** Shows the current sketches within the sketchbook folder structure; clicking on any name opens the corresponding sketch in a new editor instance.
- **Examples** Any example provided by the Arduino Software (IDE) or library shows up in this menu item. All the examples are structured in a tree that allows easy access by topic or library.
- **Close** Closes the instance of the Arduino Software from which it is clicked.
- **Save** Saves the sketch with the current name. If the file hasn't been named before, a name will be provided in a "Save as.." window.
- **Save as...**Allows to save the current sketch with a different name.
- **Page Setup** It shows the Page Setup window for printing.
- **Print** Sends the current sketch to the printer according to the settings defined in Page Setup.
- **Preferences** Opens the Preferences window where some settings of the IDE may be customized, as the language of the IDE interface.

- **Quit** Closes all IDE windows. The same sketches open when Quit was chosen will be automatically reopened the next time you start the IDE.

3.16 Edit

- **Undo/Redo** Goes back of one or more steps you did while editing; when you go back, you may go forward with Redo.
- **Cut** Removes the selected text from the editor and places it into the clipboard.
- **Copy** Duplicates the selected text in the editor and places it into the clipboard.
- **Copy for Forum** Copies the code of your sketch to the clipboard in a form suitable for posting to the forum, complete with syntax coloring.
- **Copy as HTML** Copies the code of your sketch to the clipboard as HTML, suitable for embedding in web pages.
- **Paste** Puts the contents of the clipboard at the cursor position, in the editor.
- **Select All** Selects and highlights the whole content of the editor.
- **Comment/Uncomment** Puts or removes the // comment marker at the beginning of each selected line.
- **Increase/Decrease** Indent Adds or subtracts a space at the beginning of each selected line, moving the text one space on the right or eliminating a space at the beginning.
- **Find Opens** the Find and Replace window where you can specify text to search inside the current sketch according to several options.
- **Find Next** Highlights the next occurrence – if any- of the string specified as the search item in the Find window, relative to the cursor position.
- **Find Previous** Highlights the previous occurrence - if any - of the string specified as the search item in the Find window relative to the cursor position.

3.17 Sketch

- **Verify/Compile** Checks your sketch for errors compiling it; it will report memory usage for code and variables in the console area.
- **Upload** Compiles and loads the binary file onto the configured board through the configured Port.
- **Upload Using Programmer** This will overwrite the bootloader on the board; you will need to use Tools > Burn Bootloader to restore it and be able to Upload to USB serial port again. However, it allows you to use the full capacity of the Flash memory for your sketch. Please note that this command will NOT burn the fuses. To do so a Tools -> Burn Bootloader command must be executed.
- **Export** Compiled Binary Saves a .hex file that may be kept as archive or sent to the board using other tools.
- **Show Sketch Folder** Opens the current sketch folder.
- **Include Library** Adds a library to your sketch by inserting #include statements at the start of your code. For more details, see libraries below. Additionally, from this menu item you can access the Library Manager and import new libraries from .zip files.
- Add File... Adds a source file to the sketch (it will be copied from its current location). The new file appears in a new tab in the sketch window. Files can be removed from the sketch using the tab menu accessible clicking on the small triangle icon below the serial monitor one on the right side the toolbar.

3.18 Tools

- **Auto Format** This formats your code nicely: i.e. indents it so that opening and closing curly braces line up, and that the statements inside curly braces are indented more.
- **Archive Sketch** Archives a copy of the current sketch in.zip format. The archive is placed in the same directory as the sketch.
- **Fix Encoding & Reload** Fixes possible discrepancies between the editor char map encoding and other operating systems char maps.
- **Serial Monitor** Opens the serial monitor window and initiates the exchange of data with any connected board on the currently selected Port. This usually resets the board, if the board supports Reset over serial port opening.
- **Board** Select the board that you're using. See below for descriptions of the various boards.
- **Port** This menu contains all the serial devices (real or virtual) on your machine. It should automatically refresh every time you open the top-level tools menu.
- **Programmer** For selecting a hardware programmer when programming a board or chip and not using the onboard USB-serial connection. Normally you won't need this, but if you're burning a bootloader to a new microcontroller, you will use this.
- **Burn Bootloader** The items in this menu allow you to burn a bootloader onto the microcontroller on an Arduino board. This is not required for normal use of an Arduino board but is useful if you purchase a new ATmega microcontroller (which normally comes without a bootloader). Ensure that you've selected the correct board from the Boards menu before burning the bootloader on the target board. This command also set the right fuses.

3.19 Help

Here you find easy access to a number of documents that come with the Arduino Software (IDE). You have access to **Getting Started, Reference**, this guide to the IDE and other documents locally, without an internet connection. The documents are a local copy of the online ones and may link back to our online website.

Find in Reference This is the only interactive function of the Help menu: it directly selects the relevant page in the local copy of the Reference for the function or command under the cursor.

3.20 Sketchbook

The Arduino Software (IDE) uses the concept of a sketch book: a standard place to store your programs (or sketches). The sketches in your sketchbook can be opened from the File > Sketchbook menu or from the Open button on the toolbar. The first time you run the Arduino software, it will automatically create a directory for your sketchbook. You can view or change the location of the sketchbook location from with the Preferences dialog.

- Tabs, Multiple Files, and Compilation

Allows you to manage sketches with more than one file (each of whichappears in its own tab). These can be normal Arduino code files (no visible extension), C files (.c extension), C++ files (.cpp), or header files (.h).

Before compiling the sketch, all the normal Arduino code files of the sketch (.ino, .pde) are concatenated into a single file following the order the tabs are shown in. The other file types are left as is.

3.21 Uploading

Before uploading your sketch, you need to select the correct items from the Tools > Board and Tools > Port menus. The boards are described below. On the Mac, the serial port is probably something like /dev/tty.usbmodem241 (for an Uno or Mega2560 or Leonardo) or /dev/tty.usbserial-1B1 (for a Due milanove or earlier USB board), or /dev/tty.USA19QW1b1P1.1 (for a serial board connected with a Key span USB-to-Serial adapter). On Windows, it's probably COM1 or COM2 (for a serial board) or COM4, COM5, COM7,or higher (for a USB board) - to find out, you look for USB serial device in the ports section of the Windows Device Manager. On Linux, it should be /dev/ttyACMx , /dev/ttyUSBx or similar. Once you've selected the correct serial port and board, press the upload button in the toolbar or select the Upload item from the Sketch menu. Current Arduino boards will reset automatically and begin the upload. With older boards (pre-Diecimila) that lack auto-reset, you'll need to press the reset button on the board just before starting the upload. On most boards, you'll see the RX and TX LEDs blink as the sketch is uploaded. The Arduino Software (IDE) will display a message when the upload is complete, or show an error.

REVIEW OF LITERATURE

4. REVIEW OF LITERATURE

KeattisakSangsuwan et al..,[1] proposed a video-based vehicle speed estimation system designed to eliminate the need for physical speed sensors by analyzing traffic videos. The approach integrates YOLOv3 for object detection, Deep SORT for multi-object tracking, and Lucas-Kanade optical flow for trajectory refinement. Virtual intrusion lines are defined on the road, and the system measures vehicle speed by calculating crossing distance and travel time. This method was tested on 813 vehicles, where the results showed a mean absolute error (MAE) of 3.38 km/h and root mean square error (RMSE) of 4.69 km/h. Furthermore, the performance was enhanced using a neural network that reduced the MAE to 3.07 km/h. The proposed method proved reliable in controlled and practical conditions, showing that speed can be measured accurately without specialized sensors. This research highlights the effectiveness of video-based analysis for real-world traffic monitoring. Its practical application demonstrates strong potential for cost-efficient traffic enforcement and intelligent transportation systems. Overall, the work addresses the demand for low-cost yet accurate speed detection technologies.

Xiaotao Shao et al., [2] presented a feature enhancement framework to improve nighttime vehicle detection where low visibility is a major issue. The system introduces FteGanOd, a cascade model that leverages CycleGAN to transform nighttime features into daytime-like representations. The fusion of daytime and nighttime features produces enhanced feature maps for vehicle recognition. A detection module processes these maps to achieve improved classification under challenging illumination. Experiments conducted on both public and private datasets validated the model's effectiveness, showing clear improvements compared to existing detection methods. The approach reduces errors caused by ambient light interference and poor visibility. By focusing on feature-level enhancement, the system strengthens robustness in real driving

scenarios. This work proves valuable in enabling continuous vehicle detection throughout the day. The contribution lies in bridging the performance gap between daytime and nighttime detection systems.

NafisehZarei et al., [3] developed Fast-Yolo-Rec, a lightweight vehicle detection and recognition model optimized for speed and accuracy in real-time environments. The model combines a YOLO-based backbone for detection with an LSTM-based recurrent prediction module for trajectory estimation. A semantic attention module is incorporated to focus on critical features, improving accuracy without increasing computation overhead. The recurrent structure enhances speed by predicting vehicle positions from motion history, reducing reliance on full-frame detection. The algorithm was evaluated on large-scale highway datasets with varying traffic densities. Results demonstrated that Fast-Yolo-Rec outperformed other real-time detectors in both accuracy and frame rate. The proposed model balances detection speed with recognition precision, making it highly suitable for intelligent traffic monitoring. It achieves the dual goal of efficiency and accuracy in resource-constrained systems. The approach highlights the feasibility of combining deep detection and recurrent prediction for real-world applications.

Jiaxing Zhang et al., [4] introduced a LiDAR-based roadside vehicle detection and tracking system capable of estimating vehicle speed in real time. The framework processes raw point clouds to identify vehicles, employing a centroid-based tracking algorithm integrated with Kalman filtering for accuracy. A refinement stage uses image matching to enhance trajectory reliability. The system was tested using RoboSense RS-LiDAR-32 and Velodyne VLP-16 sensors under real highway conditions. Results indicated more than 94% detection and tracking accuracy with minimal speed estimation errors, averaging only 0.22 m/s. The study confirms that roadside LiDAR is effective for large-scale vehicle tracking. Its robustness in different weather and lighting

conditions further strengthens its usability. Compared with vision-based methods, LiDAR provides superior precision in dynamic road environments. This work establishes a strong case for LiDAR integration into intelligent transportation systems.

Lei Yang et al., [5] proposed a binocular stereovision system for vehicle speed measurement that uses stereo cameras to extract 3D motion trajectories. The method begins with license plate detection, followed by stereo matching to derive 3D spatial coordinates of vehicles. Speed is estimated by connecting the trajectory points over time. A calibrated stereovision setup ensures high precision across multiple traffic lanes. The evaluation results revealed error margins between −1.6 km/h and +1.1 km/h, which fall within the regulatory tolerance levels. This confirms that stereovision can achieve accuracy comparable to specialized speed detection instruments. The method is capable of monitoring multiple lanes simultaneously, a major advantage over single-sensor solutions. Its cost-effectiveness further improves its suitability for highway surveillance. This contribution demonstrates that stereovision is a practical, accurate, and scalable solution for traffic monitoring.

Ashwin Arunmozhi et al., [6] designed a stop sign and stop line detection system to enhance autonomous driving safety at intersections. The approach uses AdaBoost classification with Haar, LBP, and HOG feature sets to detect stop signs in real-time video streams. Stop line detection is handled through classical vision-based algorithms that analyze road surface patterns. Once detected, the system estimates the distance to the stop line for precise deceleration. Torque is automatically applied to the vehicle, ensuring controlled stopping at the correct location. Experiments in real driving conditions showed reliable recognition and accurate distance estimation. The method successfully integrates perception with vehicle control. This research demonstrates how low-costvision-basedalgorithmscanenforcetrafficcomplianceinautonomous

systems. Its significance lies in strengthening safety during critical intersection maneuvers.

NurNabilah Abu Mangshor [7] developed a real-time speed limit sign recognition system tailored for autonomous vehicles. The solution employs the SSD deep learning algorithm trained on the German Traffic Sign Dataset. Additional testing was performed on Malaysian traffic signs to ensure adaptability. The system achieved a detection and recognition accuracy of 92.4%, validating its real-world effectiveness. Interclass similarity, a major challenge in traffic sign recognition, was addressed through robust training strategies. The research provides a scalable recognition framework suitable for varied traffic conditions. It ensures that vehicles can adapt dynamically to speed regulations. The contribution lies in bridging global datasets with local traffic requirements. This study highlights the growing importance of integrating sign recognition into intelligent vehicle platforms.

Shi Luo et al., [8] presented a method for traffic sign detection and recognition in cases where signs are partially obscured. The system fuses information across multiple consecutive video frames to reconstruct missing portions of traffic signs. It integrates vehicle speed data with template matching to refine recognition results. Unlike single-frame detectors such as YOLOv4and YOLOv8, this method leverages temporal context to improve accuracy. Experiments demonstrated a 15.2% improvement in matching similarity compared to baseline approaches. The system successfully recognized signs missed by conventional deep learning detectors. Its robustness against occlusion makes it particularly useful in crowded urban roads. The research demonstrates the potential of temporal and spatial fusion for traffic perception. This contribution advances the field of reliable traffic sign recognition in real driving conditions.

ThanakritMethamaniyanon [9] proposed a low-cost embedded solution for traffic sign recognition on Asian highways in Thailand. The design emphasizes computational efficiency and affordability, making it suitable for large-scale deployment. The system achieves reliable recognition performance within the limitations of embedded platforms. By optimizing algorithms for resource-constrained hardware, it provides real-time operation without compromising accuracy. This ensures accessibility for developing regions with budget restrictions. The approach demonstrates that effective traffic sign recognition can be implemented on low-cost devices. Its potential scalability makes it suitable for nationwide transportation infrastructure. The research addresses the pressing need for affordable and practical intelligent traffic systems.

Chayanon Sub-r-pa et al., [10] introduced a method to quantify the severity of traffic sign damage using a modified triplet loss network. The model analyzes visual features of signboards to categorize damage levels, supporting efficient maintenance prioritization. By training on degraded traffic sign datasets, the system improves recognition accuracy compared to traditional classification methods. The approach assists in automatically identifying worn, faded, or damaged signs. Experimental evaluation confirmed the method’s high reliability for infrastructure monitoring. This research provides a valuable tool for road safety management by enabling authorities to schedule repairs effectively. Its main contribution lies in shifting the focus from recognition alone to condition assessment. The integration of damage quantification strengthens the functionality of intelligent transportation systems.

DEFINITION OF THE PROBLEM AND SCOPE OF THE RESEARCH WORK

5. DEFINITION OF THE PROBLEM AND SCOPE OF THE RESEARCH WORK

5.1 DEFINITION OF THE PROBLEM

Road sign detection plays a critical role in modern transportation systems, ensuring road safety and assisting drivers or autonomous vehicles in following traffic regulations. However, detecting road signs in real-world conditions remains a significant challenge due to several factors. Variations in lighting, such as bright sunlight, nighttime darkness, or glare, can reduce visibility and distort captured images. Adverse weather conditions like rain, fog, or snow further complicate recognition by obscuring or blurring signs. In many cases, signboards may be faded, damaged, or partially hidden by trees, poles, or other vehicles, making reliable detection even more difficult. Additionally, differences in size, color, and shape of traffic signs across regions increase the complexity of accurate classification. Traditional camera-based systems require high maintenance, regular calibration, and often struggle to deliver consistent results under such dynamic environments. These limitations highlight the need for a more robust, reliable, and low-cost solution that can detect road signs accurately regardless of environmental challenges and ensure safer driving conditions.

5.2 SCOPE OF THERE SEARCH WORK

The scope of this research work focuses on developing an IoT-based Smart Zone Detection system aimed at enhancing road safety and minimizing accidents caused by driver negligence. The study involves integrating RFID technology into traffic signboards and vehicles to ensure real-time detection and communication of critical road information. The system provides immediate voice and SMS alerts to drivers when approaching sensitive zones, such as school areas, hospital zones, accident-prone regions, and speed-regulated

sections, thereby improving driver awareness and compliance with traffic rules. Additionally, the research explores the use of GPS modules to share the vehicle's location with family members in emergency situations, enhancing safety monitoring. The project also investigates the practical deployment of such a system under varying traffic conditions, assessing its reliability, effectiveness, and scalability. Furthermore, there search lays the ground work for future advancements, including integration with smart city infrastructure, predictive analytics, and enhanced IoT communication networks. Overall, the scope emphasizes creating a practical, cost-effective, and real-time solution that can significantly contribute to safer transportation systems and smarter road management strategies.

ARCHITECTURE DESIGN

6. ARCHITECTURE DESIGN

The architecture of the proposed IoT-based Smart Zone Detection system is designed to create seamless interaction between roadside infrastructure and in-vehicle components to ensure maximum safety for drivers. The system is structured around three primary layers: the sensing layer, the communication layer, and the application layer. At the sensing layer, RFID tags are embedded into traffic signboards located in critical areas such as accident-prone zones, school surroundings, hospital zones, and areas with mandatory speed restrictions. These tags act as identifiers that store essential information about the zone and are activated whenever a vehicle passes nearby. On the vehicle side, an RFID reader is installed, which serves as the core sensor to capture signals from the signboard tags. This forms the foundation of the detection process and ensures real-time communication between the road environment and the driver.

Once the RFID reader detects a tag, the communication layer comes into operation. The system immediately processes the tag data and triggers both voice alerts and SMS notifications to the driver. The voice alert provides an instant reminder, which ensures that the driver’s attention is directed toward the road instruction without requiring them to look away. Meanwhile, the SMS notification acts as a secondary mode of alert to reinforce the message and ensure that the warning is not ignored. This dual-mode communication ensures reliability and reduces the chances of oversight, particularly in cases where drivers might be distracted or traveling at higher speeds. To enhance effectiveness, the system is integrated with IoT modules that establish communication between the RFID reader, mobile devices, and GPS services for location tracking.

The application layer is where the system achieves its maximum functionality. Apart from delivering voice and SMS alerts, it integrates with GPS modules to track the vehicle's real-time position. This location information is particularly useful in emergency scenarios such as accidents or mechanical failures. If a critical situation arises, the system automatically shares the vehicle's live location with family members or designated contacts. This proactive communication allows families to monitor driver safety and respond immediately with necessary support. The architecture also ensures that all components—RFID tags, RFID reader, microcontroller, GSM/GPS modules, and alerting mechanisms—are integrated in a cost-effective and reliable manner, making the system suitable for real-world deployment.

Overall, the architecture is designed to balance simplicity, reliability, and real-time communication. By embedding RFID tags in signboards and equipping vehicles with RFID readers linked to IoT modules, the system bridges the gap between static road information and dynamic driver awareness. The combination of hardware components and software-based notifications ensures that critical messages reach the driver without delay. Moreover, the integration of location-sharing mechanisms adds a strong safety dimension, making the architecture highly adaptable to current road safety challenges. Thus, the proposed architecture not only enhances road safety by reducing driver negligence but also establishes a smart, IoT-based solution that supports safer and more intelligent transportation systems.

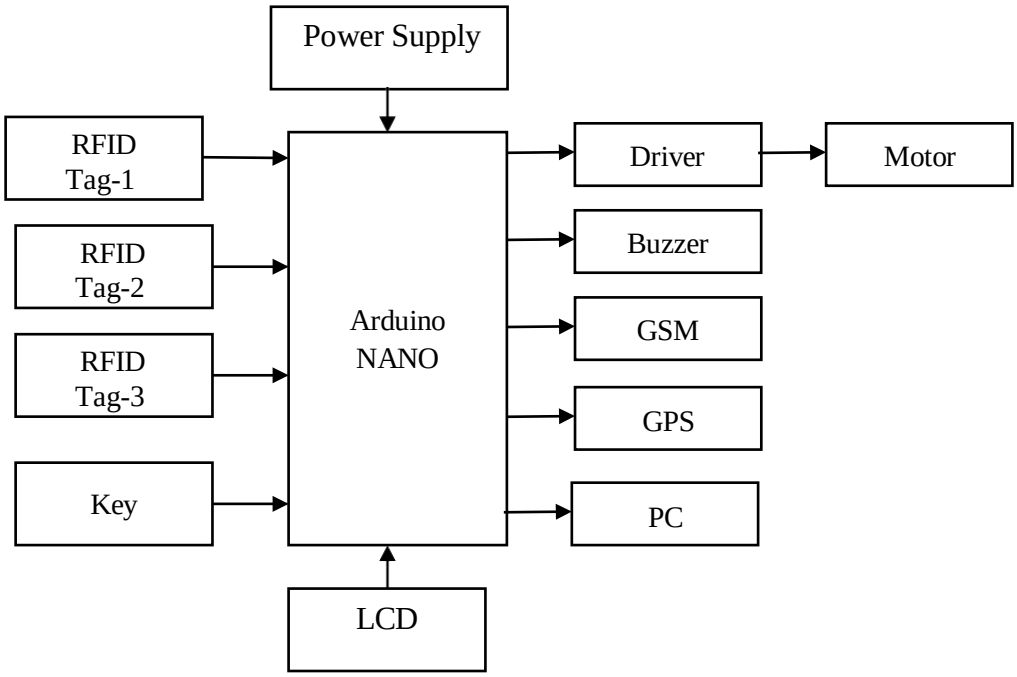

Fig.6.1 System Architecture

RESULTS AND DISCUSSIONS

7. RESULTS AND DISCUSSIONS

The Smart Zone Detection system using IoT was successfully implemented and tested to evaluate its effectiveness in improving road safety and providing real-time alerts to drivers. During the testing phase, RFID tags embedded in traffic signboards were detected reliably by the vehicle-mounted RFID reader whenever the vehicle passed through the designated zones. The system successfully triggered voice alerts, which were clear and audible enough for the driver to immediately recognize the type of zone, such as school zones, hospital areas, or speed-regulated zones. Simultaneously, SMS notifications were sent to the driver's registered mobile device, confirming the voice alert and providing an additional layer of safety. The GPS module effectively tracked the vehicle's location and successfully shared it with registered family members whenever necessary, ensuring prompt monitoring in emergency situations. The results indicate that the system can significantly reduce driver negligence by providing real-time feedback, even in high-speed or distraction-prone conditions. The integration of RFID, IoT, and GPS technologies created a seamless communication network between roadside infrastructure and the vehicle, enhancing driver awareness. Additionally, the system was tested under varying traffic conditions, demonstrating robustness and reliability. Overall, the results confirm that the proposed system not only improves driver response to traffic signs but also offers enhanced safety through continuous monitoring and immediate emergency notifications, making it a practical solution for modern road transport challenges.

CONCLUSION AND FUTURE ENHANCEMENT

8. CONCLUSION AND FUTURE ENHANCEMENT

8.1 CONCLUSION

The Smart Zone Detection system successfully demonstrates the potential of IoT-based solutions in enhancing road safety and reducing accidents caused by driver negligence. By integrating RFID tags in traffic signboards with in-vehicle RFID readers, the system ensures that drivers are continuously informed about critical zones, such as school areas, hospital zones, and speed-limited sections. The combination of voice alerts and SMS notifications proved effective in capturing driver attention and reinforcing compliance with traffic rules. Moreover, the inclusion of GPS-based location sharing with family members adds an additional safety layer, enabling timely support during emergencies. The results indicate that this system is reliable, efficient, and adaptable to real-world conditions, including high-speed driving and distraction-prone scenarios. The proposed system highlights how IoT technology can bridge the communication gap between static traffic infrastructure and dynamic driver behavior, ensuring better awareness and accident prevention. Overall, the system offers a scalable and cost-effective solution for modern transportation challenges, contributing to safer roads, enhanced monitoring, and smarter driving practices. Its design and functionality make it a promising model for future smart transportation initiatives, demonstrating tangible benefits for both individual drivers and the community.

8.2 FUTURE ENHANCEMENT

In the future, the Smart Zone Detection system can be enhanced by integrating advanced machine learning algorithm stop redict driver behavior and provide proactive alerts. Additional sensors, such as speed cameras and obstacle detection, could further improve safety in accident-prone areas. Integration with smart city infrastructure could enable centralized traffic monitoring and dynamic traffic control. Mobile applications could provide detailed zone statistics and driver analytics. Cloud-based data storage could allow long-term performance tracking and accident analysis. These improvements would make the system more intelligent, proactive, and capable of reducing road accidents more effectively.

REFERENCES

9. REFERENCES

[1] Bimbraw, Keshav. "Autonomous cars: Past, present and future a review of the developments in the last century, the present scenario and the expected future of autonomous vehicle technology." 2015 12th international conference on informatics in control, automation and robotics (ICINCO).Vol. 1.IEEE,2015.

[2] J.R.R. Uijling, K.E.A. van de Sande, T. Gever, and A.W.M. Smeulders2 "Selective Search for Object Recognition" in International Journal of Computer Vision · September 2013

[3] Ren, Shaoqing, et al. "Faster R-CNN: Towards real-time object detection with region proposal networks." IEEE transactions on pattern analysis and machine intelligence 39.6 (2016): 1137-1149.

[4] Joseph Redmon, SantoshDivvala, RossGirshick, AliFarhadi." You Only Look Once: Unified, Real-Time Object Detection" [J].2016 IEEE Conference on Computer Vision and Pattern Recognition (CVPR),2016:779788.

[5] G. Loy and N. Barnes, "Fast shape-based road sign detection for a driver assistance system", *2004 IEEE/RSJ International Conference on Intelligent Robots and Systems (IROS) (IEEE Cat. No.04CH37566)*, vol. 1, pp. 70-75, 2004.

[6] Xinyi Zhou, Wei Gong, WenLong Fu, Fengtong Du "Application of Deep Learning in Object Detection" 2017 IEEE/ACIS 16th International Conference on Computer and Information Science (ICIS)

[7] Chengji Liu ,Yufan Tao ,Jiawei Liang ,Kai Li1 ,Yihang Chen," Object Detection Based on YOLO Network" 2018 IEEE 4th Information Technology and Mechatronics Engineering Conference (ITOEC 2018)

[8] Lan,Wenbo,etal."Pedestrian detection based on YOLO network model."2018 IEEE international conference on mechatronics and automation (ICMA).IEEE, 2018.

[9] Mo, Zhimin, Liding Chen, and Wenjing You. "Identification and Detection of Automotive Door Panel Solder Joints based on YOLO."*2019 Chinese Control And Decision Conference (CCDC)*. IEEE, 2019.

[10] Rumin Zhang, Yifeng Yang," An Algorithm for Obstacle Detection based on YOLO and Light Filed Camera", 2018 Twelfth International Conference on Sensing Technology (ICST)

[11] Womg A, Shafiee MJ, Li F, Chwyl B. Tiny SSD: a tiny singleshot detection deep convolutional neural network for real-time embedded object detection. In: 2018 15th conference on computer and robot vision(CRV). IEEE;2018,p. 95101

[12] Geethapriya. S, N. Duraimurugan, S.P. Chokkalingam "Real-Time Object Detection with Yolo" International Journal of Engineering and Advanced Technology(IJEAT) ISSN:2249 –8958,Volume-8,Issue-3S, February2019

[13] A. L. Yuille, D. Snow and M. Nitzberg, "Signfinder: using color to detect localize and identify informational signs", *Sixth International Conference on Computer Vision (IEEE Cat. No.98CH36271)*, pp. 628-633, 1998.

[14] Chiung-Yao Fang, Sei-Wang Chen and Chiou-ShannFuh, "Road-sign detection and tracking", *IEEE Transactions on Vehicular Technology*, vol.52, no. 5, pp. 1329-1341, Sept. 2003.

[15] H. Luo, Y. Yang, B. Tong, F. Wu, and B. Fan, “Traffic sign recognition usinga multi-task convolutional neural network,” IEEE Trans. Intell. Transp. Syst., vol. 19, no. 4, pp. 1100–1111, Apr. 2017.

PAPER PUBLICATION

IoT-BASED SMART ZONE DETECTION WITH VOICE MESSAGE AND SMS ALERT SYSTEM

DR. R. RAJKUMAR[1]
rajkumar.ca@bhc.edu.in
Assistant professor
Department of Computer Applications
Bishop Heber College, Trichy

KISHORE S[2]
ca235113542@bhc.edu.in
First Affiliation
Department of Computer Applications
Bishop Heber College, Trichy

KISHORE KUMAR S[3]
ca235113541@bhc.edu.in
Third Affiliation
Department of Computer Applications
Bishop Heber College, Trichy

KISHORE Y S[4]
ca235113543@bhc.edu.in
Third Affiliation
Department of Computer Applications
Bishop Heber College, Trichy

KISHORE RAJ N R[5]
ca235113544@bhc.edu.in
Fourth Affiliation
Department of Computer Applications
Bishop Heber College, Trichy

ABSTRACT

Road safety remains a critical global challenge, particularly in areas designated as sensitive zones—such as school districts, hospital entrances, and accident-prone intersections—where heightened driver awareness is essential. Conventional safety measures like static signage and speed breakers often prove inadequate, especially when drivers are distracted or unfamiliar with the area. To address this gap, this paper proposes an IoT-based Smart Zone Detection System that leverages real-time GPS tracking, geofencing algorithms, voice alert mechanisms, and SMS-based notifications to proactively inform drivers upon entering predefined zones.

The system architecture is built around the ESP32 microcontroller, integrated with a Neo-6M GPS module for location tracking, a SIM800L GSM module for communication, and a DFP layer Mini for voice playback. Upon detecting proximity to a sensitive zone, the system triggers a pre-recorded voice message within the vehicle and simultaneously sends an SMS alert to a designated recipient, such as a fleet manager or emergency contact. This dual-alert mechanism ensures both immediate driver response and remote monitoring capability.

The paper outlines the design methodology, hardware integration, and software logic underpinning the system, followed by a performance evaluation based on accuracy, responsiveness, and reliability. Results indicate that the system significantly enhances situational awareness and has the potential to reduce traffic violations and accidents in critical zones. Furthermore, the modular and cost-effective nature of the system makes it suitable for deployment in school buses, ambulances, and public transport fleets. The study concludes by discussing future enhancements, including cloud-based analytics, mobile app integration, and AI-driven predictive alerts, positioning the system as a scalable solution for smart city infrastructure and intelligent transportation systems.

Keywords: IoT, Smart Zone Detection, GPS, Geofencing, Voice Alert, SMS Notification, Road Safety, Embedded Systems.

1. INTRODUCTION

In recent years, the rapid pace of urbanization and the exponential increase in vehicular traffic have significantly strained transportation infrastructure, leading to a notable rise in road accidents. This issue is particularly acute in sensitive zones such as school areas, hospital surroundings, and accident-prone intersections, where even minor lapses in driver attention can result in severe consequences. Despite the widespread use of conventional safety measures—such as static signage, speed breakers, and manual traffic enforcement—these methods often fail to capture the attention of distracted or uninformed drivers, especially in high-speed or congested environments.

The emergence of the Internet of Things (IoT) presents a transformative opportunity to address these challenges through intelligent, real-time communication between vehicles and infrastructure. IoT enables the deployment of interconnected devices that can sense, process, and respond to environmental stimuli without human intervention. In the context of road safety, this means vehicles can be equipped with systems that automatically detect entry into predefined sensitive zones and issue timely alerts to the driver and relevant stakeholders.

This paper introduces an IoT-based Smart Zone Detection System designed to enhance situational awareness and reduce accident risks. The system integrates GPS tracking, geofencing algorithms, voice alert mechanisms, and SMS notification capabilities to provide a dual-layered warning system. When a vehicle approaches or enters a designated zone, the system triggers an audible voice prompt within the vehicle and simultaneously sends an SMS alert to a remote recipient, such as a fleet manager or emergency contact. This approach not only improves driver responsiveness but also facilitates remote monitoring and accountability.

The proposed system is built using affordable and widely available components, including the ESP32 microcontroller, Neo-6M GPS module, SIM800L GSM module, and DF Player Mini for audio playback. Its modular design ensures scalability and adaptability across various transportation sectors, including school buses, ambulances, and public transit vehicles. By leveraging the power of IoT, the Smart Zone Detection System aims to bridge the gap between static infrastructure and dynamic vehicular behavior, ultimately contributing to safer and smarter urban mobility.

2. LITERATURE REVIEW

R. Sharma et al. [1] proposed an IoT-based vehicle monitoring and driver assistance framework that integrates advanced IoT technologies to track driver behavior, detect drowsiness, and ensure adherence to traffic regulations. By collecting real-time driving data, the framework enables timely corrective actions, thereby improving fleet safety and operational efficiency. Their findings show that IoT-driven monitoring systems can significantly reduce accident risks in smart fleet management.

S. Verma et al. [2] developed an automatic accident detection and notification system using IoT sensors. The system combines accelerometers and gyroscopic modules to identify sudden impacts or rollovers and instantly alerts rescue operators and emergency contacts. This rapid communication helps minimize emergency response times and increases the survival chances of accident victims.

M. Ali et al. [3] explored IoT applications for real-time accident detection and vehicle safety monitoring. Their system continuously assesses vehicle conditions and accident scenarios, offering valuable insights for drivers and authorities alike. The study highlights IoT's role in supporting accident prevention strategies and strengthening road safety measures.

P. Gupta et al. [4] presented an IoT and machine learning-enabled collision detection system. By integrating predictive ML models with IoT sensors, the framework improves detection accuracy and reduces false alarms compared to conventional approaches. The research also demonstrated enhanced emergency

response through intelligent, real-time collision detection.

A. Khan et al. [5] proposed a cost-effective IoT-based accident detection and tracking system built using Arduino Uno and GPS modules. Accelerometer data is used to detect collisions or unsafe driving behaviors, and the system transmits real-time location details to emergency services. This highlights the feasibility of using simple microcontrollers for scalable IoT safety solutions.

H. Patel et al. [6] introduced a multifunctional IoT-driven vehicle safety system that integrates number plate recognition with real-time vehicle tracking. The system not only helps prevent theft but also supports traffic law enforcement, making it a practical tool for enhancing road surveillance and intelligent transportation networks.

J. Roy et al. [7] proposed an IoT-based monitoring framework focusing on ignition control and emission tracking. Their work emphasizes the dual benefits of reducing vehicle theft risks while also contributing to better air quality through IoT-enabled operational control.

S. Mehra et al. [8] reviewed IoT-enabled smart vehicles, particularly in terms of road navigation and driver comfort. Their study showed how IoT adoption improves user experience, reduces congestion, and enhances navigation efficiency. However, they noted that challenges such as interoperability and network connectivity still limit widespread deployment.

K. Singh et al. [9] designed a low-cost IoT accident avoidance system using Bluetooth-based ADAS proximity detection. The system provides timely alerts in dense urban traffic, effectively reducing collision risks and promoting safer driving practices.

T. Banerjee et al. [10] focused on highway work zone safety by developing a smart IoT proximity alert system. Using sensors and alert modules, the system warns drivers of upcoming construction zones, significantly lowering the likelihood of accidents in high-risk areas.

L. Zhang et al. [11] proposed an Internet of Vehicles (IoV) accident prediction and prevention model that leverages deep learning. By analyzing driving patterns, the system predicts potential accidents, thereby enabling proactive safety measures, particularly on highways.

R. Das et al. [12] worked on a real-time IoT-based public safety alert and emergency response system. Their framework classifies incidents through IoT devices and immediately alerts authorities, which helps reduce risks and improve response efficiency during emergencies.

A. Iqbal et al. [13] introduced an IoT-based smart accident detection and early warning framework. Their design integrates IoT sensors with wireless communication protocols to transmit emergency alerts quickly, optimizing both safety and emergency response management.

S. Choudhary et al. [14] conducted a review on IoT applications in smart intersections and connected autonomous vehicles. Their study highlighted how IoT enhances urban mobility, improves safety, and addressed regional implementations and deployment challenges in smart traffic systems.

Finally, V. Kumar et al. [15] proposed a real-time accident detection model based on YOLOv11 for traffic management. The system achieved high detection efficiency with reduced computational costs, making it a strong candidate for integration with intelligent traffic monitoring solutions.

3. METHODOLOGY

The proposed IoT-based Smart Zone Detection System is engineered to provide real-time alerts to drivers upon entering predefined sensitive zones. The methodology encompasses both hardware and software components, integrated to deliver voice prompts and SMS notifications. The system is modular, scalable, and designed for low-power embedded deployment in vehicles.

A. System Architecture

The system is composed of the following key components:

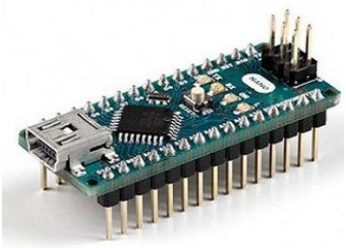

Fig. 3.1 Arduino Nano

ESP32 Microcontroller Serves as the central processing unit. It receives GPS data, executes geofencing logic, and controls both the voice playback and GSM modules.

Fig. 3.2 GPS

GPS Module (Neo-6M) Continuously captures the vehicle's real-time location in terms of latitude and longitude. It communicates with the ESP32 via the UART protocol and updates location data at regular intervals.

Fig. 3.3 GSM

GSM Module (SIM800L) Responsible for sending SMS alerts to a designated mobile number when a zone is entered. It uses AT commands over PART to establish cellular communication and transmit messages.

Fig. 3.4 Buzzer

DFP layer Mini + Speaker Plays pre-recorded voice messages stored on a micros card. The ESP32 sends serial commands to the DFP layer to trigger playback based on zone detection.

Fig 3.5 USB types of port

Micros Card Stores MP3 files corresponding to different zones (e.g., "Caution! School zone ahead"). These files are accessed by the DFP layer Mini during alert activation.

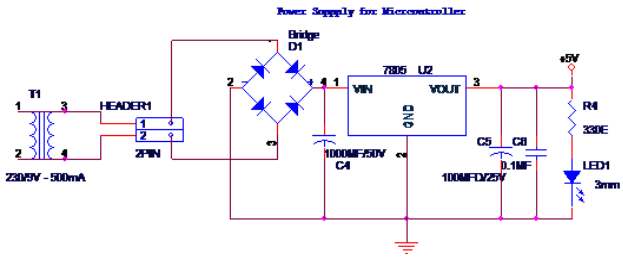

Fig. 3.6 Power supply

Power Supply The system is powered using either a 7V–12V battery pack or a 5V USB power bank. Voltage regulation ensures stable operation across all modules.

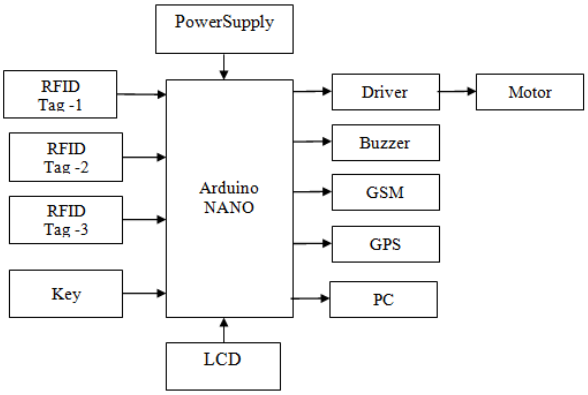

Fig 3.7 Block Diagram

B. Geofencing Logic

The core of the system's intelligence lies in its geofencing algorithm:

Zone Definition: Each sensitive zone is defined by a central GPS coordinate and a radius (typically 100 meters).

Distance Calculation: The Aversive formula is used to calculate the great-circle distance between the vehicle's current location and the zone center:

$$d = 2r \cdot \arcsin\left(\sqrt{\sin^2\left(\frac{\Delta\phi}{2}\right) + \cos(\phi_1)\cdot\cos(\phi_2)\cdot\sin^2\left(\frac{\Delta\lambda}{2}\right)}\right)$$

= latitude

= longitude

= Earth's radius (~6371 km)

Trigger Condition: If the calculated distance is less than or equal to the threshold radius, the system initiates the alert sequence.

C. Communication Protocols:

Fig 3.8 LCD Display

PART (Universal Asynchronous Receiver-Transmitter) Used for serial communication between ESP32 and both GPS and GSM modules. Ensures routability. Eligible data exchange with minimal latency.P3 Protocol Enables ESP32 to control DFP layer Mini for voice playback. Commands Include play, pause, volume control, and track selection.

D. Alert: Flow

The operational flow of the system is as follows:

Plaintext

GPS → ESP32 → Zone Verification → Alert Trigger → Voice Playback + SMS Notification

GPS Module provides real-time location data.

ESP32 prostops the data and checks proximity to predefined zones.

If within the data, Range, it triggers:

Voice Alert via DF Player Mini

SMS Notification via GSM Module.

This dual-alert mechanism ensures both immediate driver awareness and remote monitoring capability. hodology ensures that the system operates autonomously, with minimal human intervention, and is capable of functioning in real-world vehicular environments. signed to be robust, responsive, and adaptable to various use cases including school transportation, emergency services, and fleet management.

4. RESULT AND DISCUSSION

To evaluate the effectiveness of the proposed IoT-based Smart Zone Detection System, a series of controlled simulations and field tests were conducted. The goal was to assess the system's accuracy, responsiveness, reliability, and practical usability in real-world scenarios such as school zones and hospital vicinities.

1. Accuracy of GPS-Based Detection

The system demonstrated consistent location tracking with an average positional accuracy of ±5 meters. This level of precision was sufficient for identifying entry into predefined geo-fenced zones, particularly those with a radius of 100 meters. The Neo-6M GPS module performed reliably in open environments, though minor deviations were observed in urban settings due to signal reflections and obstructions—a phenomenon commonly referred to as GPS drift. Despite this, the system maintained acceptable performance for zone detection in most conditions.

2. Response Time

One of the critical performance metrics was the latency between zone entry and alert activation. The system consistently triggered alerts within 2 seconds of entering a geo-fenced area. This rapid response is attributed to the efficient processing capabilities of the ESP32 microcontroller and the optimized geofencing algorithm. Such low latency ensures that drivers receive timely warnings, allowing for immediate corrective action such as speed reduction or increased vigilance.

3. Voice Alert Clarity

The DFP layer Mini module, paired with a compact speaker, successfully delivered pre-recorded voice messages that were both audible and context-specific.

Messages such as “Caution! School zone ahead” were clearly understood by drivers, even in moderately noisy environments. The use of MP3 files stored on a micros card allowed for easy customization of alerts based on zone type, enhancing the system’s adaptability.

4. SMS Notification Reliability

The GSM module (SIM800L) effectively transmitted SMS alerts to designated mobile numbers, typically within 5 to 10 seconds of zone entry. This feature proved valuable for remote monitoring, especially in fleet management scenarios. However, occasional delays were noted in areas with weak cellular coverage, highlighting a dependency on network stability. Despite this, the SMS functionality remained robust in most test environments.

5. Real-World Application Success:

The system was deployed in simulated school and hospital zones, where it consistently alerted drivers upon entry. Observations indicated improved driver responsiveness and increased caution in these areas. The dual-alert mechanism—combining voice and SMS—proved effective in reinforcing safety protocols and enhancing situational awareness.

6. Limitations and Observations

While the system performed well overall, certain limitations were identified:

GPS Drift: In dense urban environments, signal interference led to occasional inaccuracies in location detection.

SMS Latency: Network-dependent delays affected the timeliness of remote alerts in low-signal zones.

The system relied on hardcoded zone coordinates, limiting flexibility unless manually updated.

These limitations suggest areas for future improvement, such as integrating real-time mapping services or cloud-based zone management.

5. CONCLUSION

The IoT-based Smart Zone Detection System presented in this study offers a robust and practical solution to one of the most pressing challenges in modern transportation: ensuring safety in sensitive zones such as school areas, hospital vinities, and accident-prone intersections. By leveraging the

power of geo-location through GPS, dynamic zone monitoring via geofencing, and real-time alert

mechanisms using voice prompts and SMS notifications, the system significantly enhances driver awareness and responsiveness.

The dual-alert architecture—audible warnings for immediate driver feedback and SMS messages for remote oversight—creates a layered safety net that not only informs but also enforces responsible driving behavior. This approach bridges the gap between passive infrastructure (like static signage) and active, intelligent systems capable of adapting to real-time conditions.

One of the standout features of the system is its modularity and affordability. Built using widely available components such as the ESP32 microcontroller, Neo-6M GPS module, SIM800L GSM module, and DFP layer Mini, the system is both cost-effective and scalable. This makes it highly suitable for deployment across a range of transportation applications, including school buses, ambulances, fleet vehicles, and public transport systems—especially in regions where budget constraints limit access to advanced traffic management technologies.

Moreover, the system’s simplicity in design does not compromise its effectiveness. It can be easily integrated into existing vehicle setups without the need for extensive infrastructure changes. This plug-and-play capability positions it as a viable candidate for rapid adoption in both urban and rural contexts.

Finally, the Smart Zone Detection System exemplifies how IoT can be harnessed to create intelligent, responsive, and inclusive safety solutions. Its potential to reduce accidents, improve compliance, and support smart city initiatives is substantial.

With further enhancements—such as cloud integration, AI-based predictive analytics, and mobile app interfaces—the system can evolve into a comprehensive safety platform, contributing meaningfully to the future of intelligent transportation systems.

6. FUTURE ENHANCEMENT

To further elevate the capabilities and scalability of the IoT-based Smart Zone Detection System, several enhancements can be integrated. These improvements aim to increase system intelligence, user accessibility, and environmental adaptability—making the solution more robust, data-driven, and context-aware.

1. Cloud Integration

Incorporating cloud platforms such as Firebase, AWS IoT Core, or Microsoft Azure would enable real-time data logging, centralized analytics, and remote system management. This enhancement would allow:

Live tracking of vehicle movements and zone entries.
Historical data analysis to identify patterns in driver behaviour and zone violations.
Remote configuration of geo-fenced zones and alert parameters.
Scalable deployment across multiple vehicles and geographic regions.
Cloud connectivity also opens the door to integrating dashboards for fleet managers, enabling data-driven decisions and predictive maintenance.

2. Mobile App Interface

Developing a companion mobile application would empower users with direct control and visibility over the system. Key features could include:
Custom Zone Setup: Users can define or modify geo-fenced zones using map-based interfaces.
View logs of past alerts, including timestamps, zone names, and GPS coordinates.
Receive real-time alerts on mobile devices, complementing SMS.
Different access levels for drivers, administrators, and supervisors.
This app would enhance usability and make the system more interactive and user-friendly, especially for fleet operators and parents monitoring school transport.

3. AI-Based Prediction Models

Integrating machine learning algorithms would allow the system to evolve from reactive alerts to predictive safety intelligence. Potential applications include:

Driver Behavior Analysis: Detect patterns such as frequent speeding or abrupt braking near zones.
Risk Forecasting: Predict likelihood of zone violations based on time, traffic, and driver history.
Modify alert intensity or timing based on predicted risk level.
Techniques like decision trees, KNN classifiers, or neural networks could be trained on historical data to improve system responsiveness and reduce false positives.

4. Environmental Sensor Integration

To make the system context-aware, it can be enhanced with sensors that monitor weather, air quality, and traffic density. This would enable:

Dynamic Alerting: Adjust alert thresholds based on visibility, rain, or fog conditions.
Delay or intensify alerts based on congestion levels.
Trigger alerts in areas with poor air quality, especially near hospitals or schools. Combining environmental data with geolocation and AI would
create a truly intelligent safety system aligned with smart city goals.

7. REFERENCES

[1] R. Sharma, et al., “IoT-Based Vehicle Monitoring and Driver Assistance System Framework for Safety and Smart Fleet Management,” 2023.

[2] S. Verma, et al., “An IoT-Based Automatic Vehicle Accident Detection and Notification System,” 2023.

[3] M. Ali, et al., “Vehicle Safety and Accident Detection Using IoT,” 2023.

[4] P. Gupta, et al., “ML and IoT-Enabled System for Vehicle Collision Detection and Emergency Response,” 2024.

[5] A. Khan, et al., “IoT-Based Smart Vehicle Accident Detection and Tracking Using Arduino Uno and GPS Modem,” 2023.

[6] H. Patel, et al., “IoT-Driven Multi-Function Vehicle Safety System,” 2024.

[7] J. Roy, et al., “An IoT-Based Vehicle Safety and Monitoring System,” 2024.

[8] S. Mehra, et al., “A Study on IoT-Enabled Smart Vehicles for Road Navigation and Ride Comfortability,” 2025.

[9] K. Singh, et al., “Study on IoT-Based Vehicle Accident-Avoidance System,” 2023.

[10] T. Banerjee, et al., “A Smart IoT Proximity Alert System for Highway Work Zone Safety,” 2024.

[11] L. Zhang, et al., “Enhancing Road Safety in Internet of Vehicles Using Deep Learning,” 2025.

[12] R. Das, et al., “Developing Real-Time IoT-Based Public Safety Alert and Emergency Response System,” 2023.

[13] A. Iqbal, et al., “IoT-Based Smart Accident Detection and Early Warning System for Emergency Response and Risk Management,” 2024.

[14] S. Choudhary, et al., “Smart Intersections and Connected Autonomous Vehicles: A Review,” 2024.

[15] V. Kumar, et al., “Real-Time Rapid Accident Detection for Optimizing Road Traffic Management,” 2025.

9% Overall Similarity

The combined total of all matches, including overlapping sources, for each database.

Filtered from the Report

- Bibliography

Match Groups

- 25Not Cited or Quoted7%
  Matches with neither in-text citation nor quotation marks
- 6 Missing Quotations2%
  Matches that are still very similar to source material
- 0 Missing Citation0%
  Matches that have quotation marks, but no in-text citation
- 0 Cited and Quoted0%
  Matches with in-text citation present, but no quotation marks

Top Sources

4% Internet sources
4% Publications
6% Submitted works (Student Papers)

Integrity Flags

0 Integrity Flags forReview

Our system's algorithms look deeply at a document for any inconsistencies that would set it apart from a normal submission. If we notice something strange, we flag it for you to review.
A Flag is not necessarily an indicator of a problem. However, we'd recommend you focus your attention there for further review.

APPENDIX

11. APPENDIX

11.1 SOURCE CODE

```
import os

import time

import serial  # import serial pacakge

import sys  # import system package

import yagmail

import pyttsx3

arduino = serial.Serial('COM5', 9600, timeout=.1)

time.sleep(2)

count = 0

def mail_send(data,sub):

    print("Sending mail...")

    mail = 'sampletestmail.786@gmail.com';

    password = 'vnzymrxlzmdyurch'

    # list of email_id to send the mail

    li = ["sskishore994@gmail.com"]

    yag = yagmail.SMTP(mail, password)

    for dest in li:

        yag.send(

            to="sskishore994@gmail.com",

            subject=sub,

            contents=data,

        )
```

```
    print("Mail sent to all...!")
while True:
    data = arduino.readline()[:-2]  # the last bit gets rid of the new-line chars


    if data:
        data = data.decode('utf-8')
        data_v = str(data)
        data_v = data_v.split(' ')
        print(data_v)
        data1 = data_v[0]
        data1i = data_v[0]
        print(data1i)
        print('Tag  Number: ', data1)


        if data1i =="1":
            print("School Zone Detection")
            engine = pyttsx3.init()
            engine.say("Hi... School Zone Detected - Take Care...!")
            engine.runAndWait()
            data = "School Zone  Detected...!"
            sub = "Zone: SCHOOL"
            if count == "0":
                mail_send(data, sub)
                count = count + 1
```

```
elif data1i == "2":
    print("Accident Zone Detection")
    engine = pyttsx3.init()
    engine.say("Hi... Accident Zone Detected - Take Care...!")
    engine.runAndWait()
    data = "Accident Zone  Detected...!"
    sub = "Zone: ACCIDENT"
    if count == 0:
        mail_send(data, sub)
        count = count + 1
elif data1i == "3":
    print("Hospital Zone Detection")
    engine = pyttsx3.init()
    engine.say("Hi... Hospital Zone Detected - Take Care...!")
    engine.runAndWait()
    data = "Hospital Zone  Detected...!"
    sub = "Zone: HOSPITAL"
    if count == 0:
        mail_send(data, sub)
        count = count + 1
 else:
    print("NORMAL")
    count = 0
    print(' ')
```